Indian Institute of Technology Bhubaneswar
School of Electrical Sciences
Mid-Examination-Autumn 2020

EC2L002: Signals and Systems
BTech (EE) and Dual Degree (EE and PED)

Maximum Marks: 30

14th October 2020 **2-Hours**

- *Answer all questions.*
- *Your answer needs to be precise and should address the question directly.*
- *Unnecessary lengthy answers will attract negative marking.*
- *You may write your answers preferably as bullet points.*
- *Any data assumed should be stated clearly and explicitly.*

Q1 Determine whether the following signals are periodic; if periodic, give the period. (4 Marks)

x(t) = 4cos(3πt+π/2) + 2cos(8πt+π/2)

x(t) = 2cos(3πt+π/2) + 4cos(10t-π/2)

x[n] = 10cos(2π(8)n)

x[n] = 10cos(8n)

Q2 Consider the system shown in figure below. Determine whether it is (a) causal (b) linear (c) time-invariant (d) stable (2 Marks)

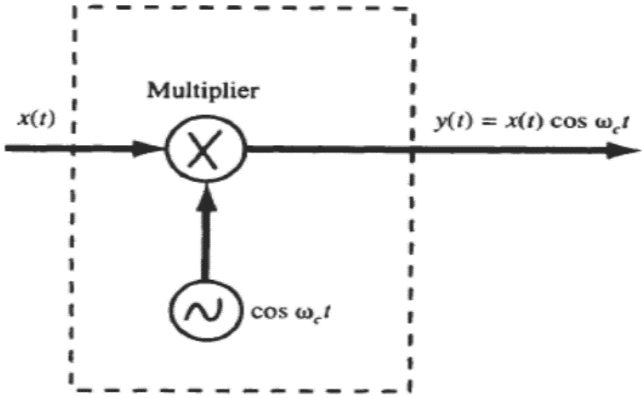

Q3 Evaluate $y(t) = x(t)*h(t)$, where $x(t) = u(t) - u(t-3)$ and $h(t) = u(t) - u(t-2)$ (a) by an analytical technique and (b) by a graphical method. (5 Marks)

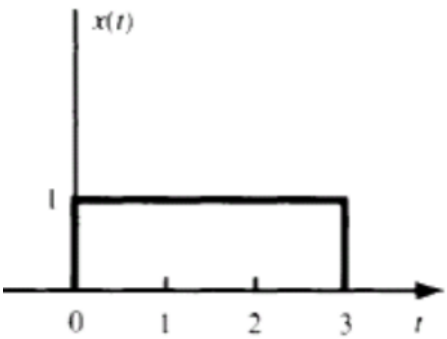

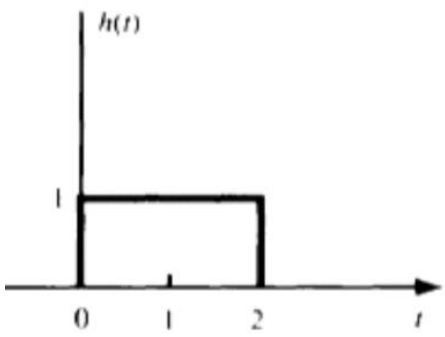

Q4. The continuous-time system consists of two integrators and two scalar multipliers. Write a differential equation that relates the output y(t) and the input x(t). (2 Marks)

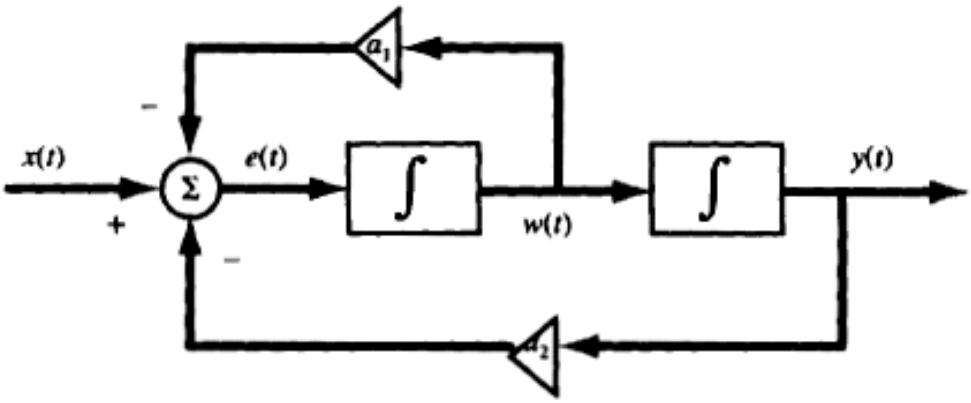

Q5 Consider the discrete-time system. Write a difference equation that relates the output y[n] and the input x[n].

(2 Marks)

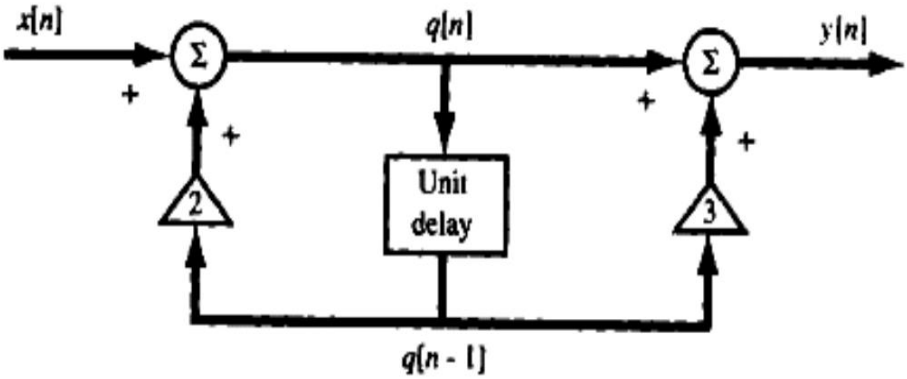

Q6. For the following signals find the Fourier series and plot the spectrum: (2+2+3) Marks

a) x(t) = 2 + 4cos (50t + π/2) +12cos (100t - π/3)

b) x(t) = 4cos (2π (1000) t) cos(2π750000t)

c) x(t) is shown in figure below

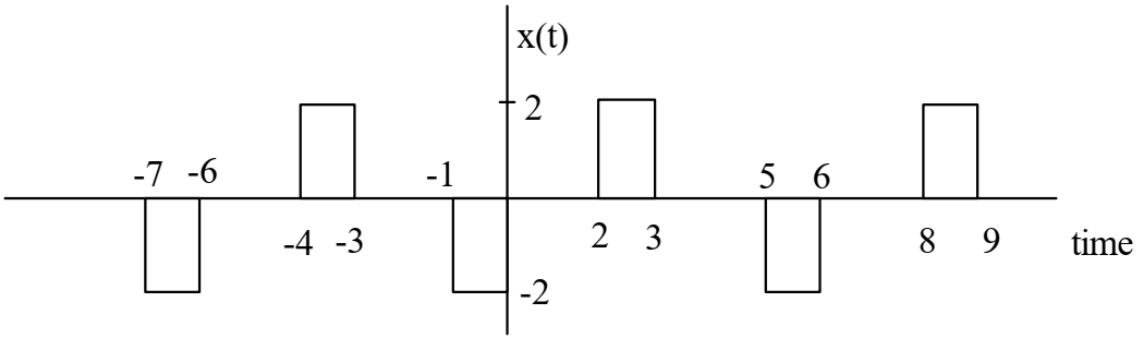

Q7. (2+2) Marks

(a) Find the Fourier transform of the following signal and sketch |X(w)|.

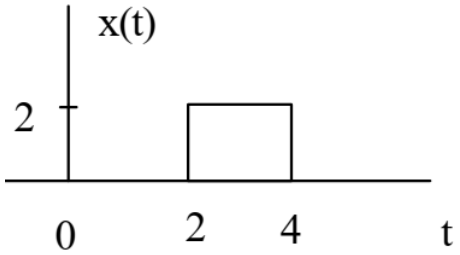

(b) Find the FT by using derivative property and sketch |X(w)|

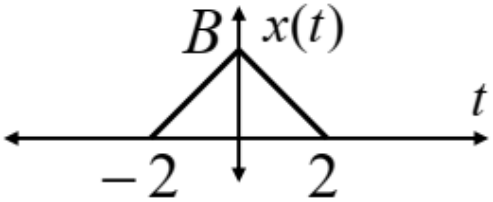

Q8. Consider the following sampling and reconstruction configuration. The output y(t) of the ideal reconstruction can be found by sending the sampled signal $x_s(t) = x(t)p(t)$ through an ideal lowpass filter. Let $x(t) = 2 + \cos(50\pi t)$ and T = 0.01 sec. (2+1+1) Marks

a) Draw $|X_s(\omega)|$ where $x_s(t) = x(t)p(t)$. Determine if aliasing occurs.

b) Determine the expression for y(t).
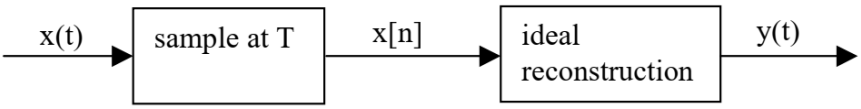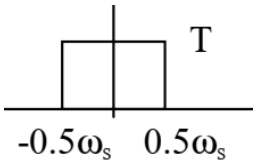
c) Determine an expression for x[n]